AQA

Please write clearly in block capitals.

Centre number | | | | | | Candidate number | | | | |

Surname _____

Forename(s) _____

Candidate signature _____
I declare this is my own work.

A-level
FURTHER MATHEMATICS
Paper 2

Friday 6 June 2025 | Afternoon | Time allowed: 2 hours

Materials
- You must have the AQA Formulae and statistical tables booklet for A-level Mathematics and A-level Further Mathematics.
- You should have a graphical or scientific calculator that meets the requirements of the specification.

Instructions
- Use black ink or black ball-point pen. Pencil should only be used for drawing.
- Fill in the boxes at the top of this page.
- Answer **all** questions.
- You must answer each question in the space provided for that question. If you require extra space for your answer(s), use the lined pages at the end of this book. Write the question number against your answer(s).
- Do **not** write outside the box around each page or on blank pages.
- Show all necessary working; otherwise marks for method may be lost.
- Do all rough work in this book. Cross through any work that you do not want to be marked.

Information
- The marks for questions are shown in brackets.
- The maximum mark for this paper is 100.

Advice
- Unless stated otherwise, you may quote formulae, without proof, from the booklet.
- You do not necessarily need to use all the space provided.

For Examiner's Use	
Question	Mark
1	
2	
3	
4	
5	
6	
7	
8	
9	
10	
11	
12	
13	
14	
15	
16	
17	
TOTAL	

Do not write outside the box

Answer **all** questions in the spaces provided.

1 The vectors $\begin{bmatrix} a \\ b \end{bmatrix}$ and $\begin{bmatrix} c \\ 1 \end{bmatrix}$ are perpendicular.

Which **one** of the following statements must be true?

Tick (✓) **one** box.

[1 mark]

$a = bc$ ☐

$b = ac$ ☐

$a = -bc$ ☐

$b = -ac$ ☐

2 The quadrilateral Q_1 has an area of 5 cm^2

The matrix $\begin{bmatrix} 4 & -1 \\ 2 & 1 \end{bmatrix}$ represents the transformation T

The transformation T acts on Q_1 to give the quadrilateral Q_2

Find the area of Q_2

Circle your answer.

[1 mark]

5 cm^2 10 cm^2 30 cm^2 180 cm^2

Do not write outside the box

3 Find $\frac{\mathrm{d}}{\mathrm{d}x}\left(\sin^{-1}x - 2\cos^{-1}x\right)$

Circle your answer.

[1 mark]

$\frac{-3}{\sqrt{1-x^2}}$ $\frac{-1}{\sqrt{1-x^2}}$ $\frac{1}{\sqrt{1-x^2}}$ $\frac{3}{\sqrt{1-x^2}}$

4 The function f is defined by $\mathrm{f}(x) = 16 - x^2 \quad (x \in \mathbb{R})$

On which of the following intervals is the mean value of f the greatest?

Tick (✓) **one** box.

[1 mark]

$0 \le x \le 1$ ☐

$0 \le x \le 2$ ☐

$0 \le x \le 3$ ☐

$0 \le x \le 4$ ☐

Turn over for the next question

Do not write outside the box

5 The complex number $z = (3 + 4\mathrm{i})(5 + c\mathrm{i})$, where c is an integer.

It is given that $\mathrm{Re}(z) = 7$

Find the value of c

[2 marks]

Do not write outside the box

6 A curve passes through the point $(2, k)$, where $k > 1$

The curve satisfies the differential equation

$$\frac{dy}{dx} = \frac{x^2 - 3y}{xy}$$

Using Euler's step by step method once, with starting point (2, k) and a step length of 0.1, gives an estimate of $y = 6.069$ when $x = 2.1$

Find the value of k

Give your answer to **three** decimal places.

[3 marks]

Turn over for the next question

Do not write outside the box

There are no questions printed on this page

DO NOT WRITE ON THIS PAGE
ANSWER IN THE SPACES PROVIDED

Do not write outside the box

7 The matrix **A** is defined by $\mathbf{A} = \begin{bmatrix} 4 & -2 \\ -6 & 3 \end{bmatrix}$

Find a non-zero 2×2 matrix **B** such that $\mathbf{AB} = 0$

[3 marks]

Turn over for the next question

Do not write outside the box

8 The function f is defined by

$$f(x) = x^3 + x^2 - 12x \qquad (x \in \mathbb{R})$$

Figure 1 shows the graph of $y = f(x)$

Figure 1

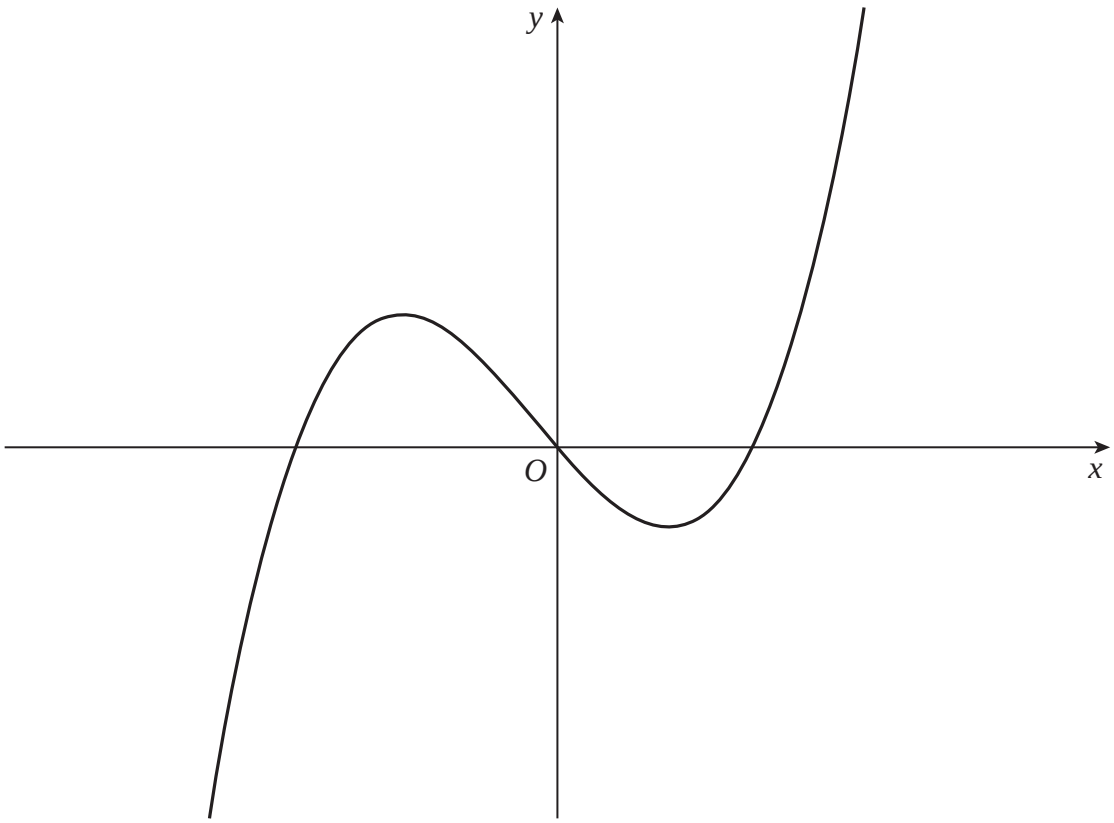

8 (a) The graph of $y = f(x)$ is transformed by a stretch, scale factor 2, parallel to the x-axis with the y-axis fixed, to give the graph of $y = g(x)$

On **Figure 1**, sketch the graph of $y = g(x)$, showing the values of x where the graph crosses the x-axis.

[3 marks]

Do not write outside the box

8(b) Find the set of values of x such that the conditions $f(x) > 0$ **and** $g(x) < 0$ are **both** satisfied.

[2 marks]

Turn over for the next question

Do not write outside the box

9 (a) It is given that, for the complex number z,

$$\left|\frac{z}{z+1}\right| = 1$$

Find $\operatorname{Re}(z)$

[3 marks]

9 (b) Show that the only solutions of the equation

$$\left(\frac{w}{w+1}\right)^3 = 1$$

are $w = \dfrac{e^{\frac{2\pi i}{3}}}{1 - e^{\frac{2\pi i}{3}}}$ and $w = \dfrac{e^{-\frac{2\pi i}{3}}}{1 - e^{-\frac{2\pi i}{3}}}$

[4 marks]

Do not write outside the box

9 (c) Use the results of part **(a)** and part **(b)** to find $\operatorname{Re}\left(\dfrac{e^{\frac{2\pi i}{3}}}{1-e^{\frac{2\pi i}{3}}}\right)$

Fully justify your answer.

[2 marks]

Do not write outside the box

10 The function f is defined by

$$\mathrm{f}(x) = \frac{2\left(x^2 - 4\right)}{x^2 + 6x + 9}$$

10 (a) Write down the equations of the asymptotes to the graph of $y = \mathrm{f}(x)$

[2 marks]

10 (b) Without using calculus, show that the range of f is $\left\{k : k \geq -\frac{8}{5}\right\}$

[4 marks]

Do not write outside the box

10 (c) The graph of $y = \mathrm{f}(x)$ has one stationary point.

Without using calculus, find the coordinates of this stationary point.

[3 marks]

10 (d) Sketch the graph of $y = \mathrm{f}(x)$ on the axes below.

[4 marks]

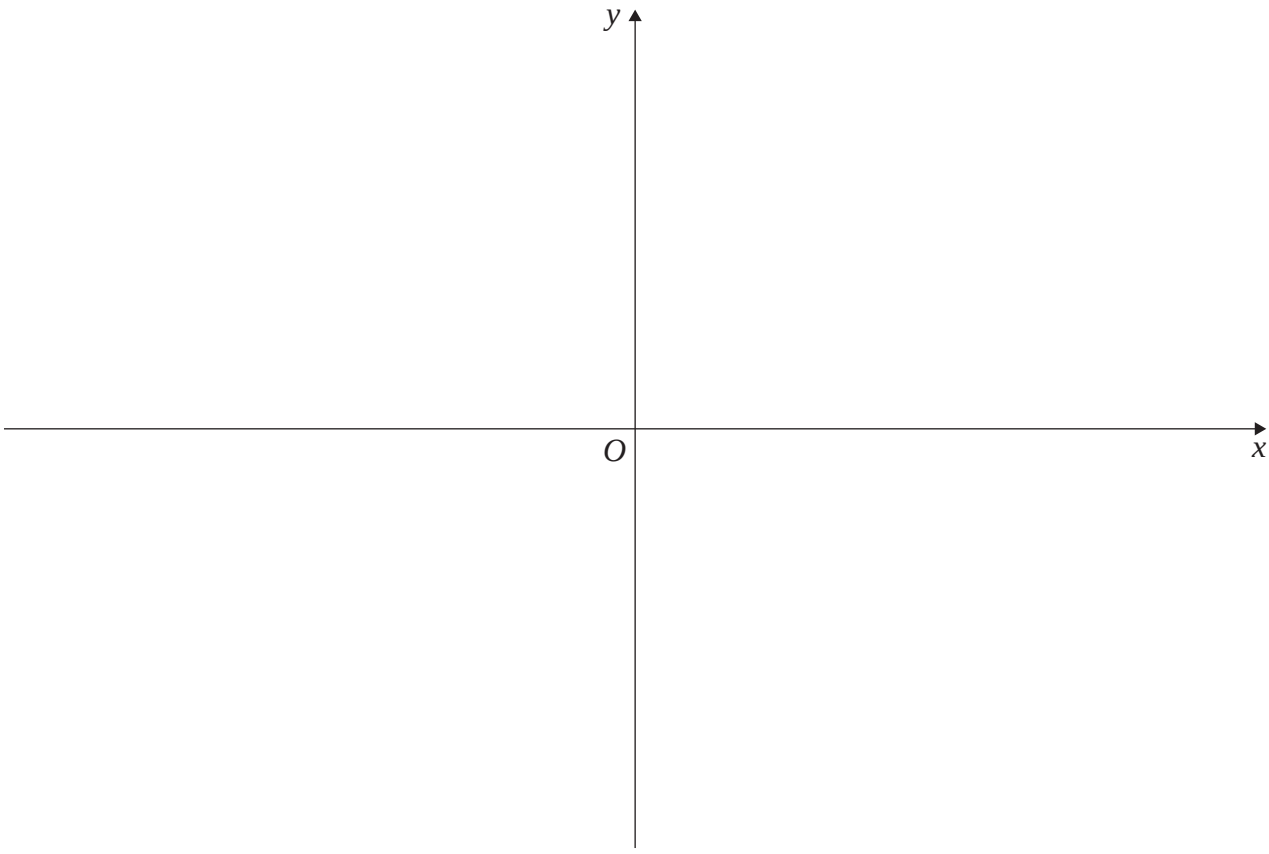

Do not write outside the box

11 The line L has vector equation

$$\mathbf{r} = \begin{bmatrix} 5 \\ 2 \\ 11 \end{bmatrix} + \lambda \begin{bmatrix} 2 \\ -1 \\ 3 \end{bmatrix}$$

The point A has coordinates $(1, -1, -6)$

11 (a) Find the coordinates of the point on L which is closest to the point A

[5 marks]

Do not write outside the box

11(b) The point B has coordinates $(3, -2, -1)$

The point C has coordinates $(4, 0, 1)$

The points A, B and C all lie in the plane Π

Find a Cartesian equation of Π

[4 marks]

11 (c) Find the coordinates of the point where the line L meets the plane Π

[3 marks]

Do not write outside the box

12 Find the value of

$$\int_{1}^{5} \frac{1}{\sqrt{x^2+6x+5}}\,\mathrm{d}x$$

Give your answer in the form

$$\ln\left(8+a\sqrt{3}+b\sqrt{5}+c\sqrt{15}\right)$$

where a, b and c are integers.

[5 marks]

Do not write outside the box

Turn over for the next question

Do not write outside the box

13 The matrix **M** is defined by $\mathbf{M} = \begin{bmatrix} 1 & -\sqrt{3} \\ \sqrt{3} & 1 \end{bmatrix}$

13 (a) The matrix **M** represents an anticlockwise rotation about the origin through an angle θ, where $0 \leq \theta \leq 2\pi$, followed by an enlargement, scale factor r, with centre at the origin where r is a positive integer.

Find the value of r and the value of θ

[3 marks]

13 (b) It is given that $\begin{bmatrix} u \\ v \end{bmatrix} = \mathbf{M} \begin{bmatrix} x \\ y \end{bmatrix}$

Using the value of r and the value of θ which you obtained in part **(a)**, verify that

$$r\,\mathrm{e}^{\mathrm{i}\theta}\left(x + \mathrm{i}y\right) = u + \mathrm{i}v$$

[3 marks]

Do not write outside the box

13 (c) Hence, find the value of x and the value of y such that

$$\mathbf{M}^8 \begin{bmatrix} x \\ y \end{bmatrix} = \begin{bmatrix} 0 \\ 2 \end{bmatrix}$$

Give your answers in an exact form.

[4 marks]

Turn over for the next question

Do not write outside the box

14 A children's play area in a park contains a paddling pool.

The outline of the paddling pool is modelled by the polar curve

$$r = 6 + 2\cos(2\theta)$$

where r is measured in metres.

Figure 2 shows the outline of the paddling pool.

Figure 2

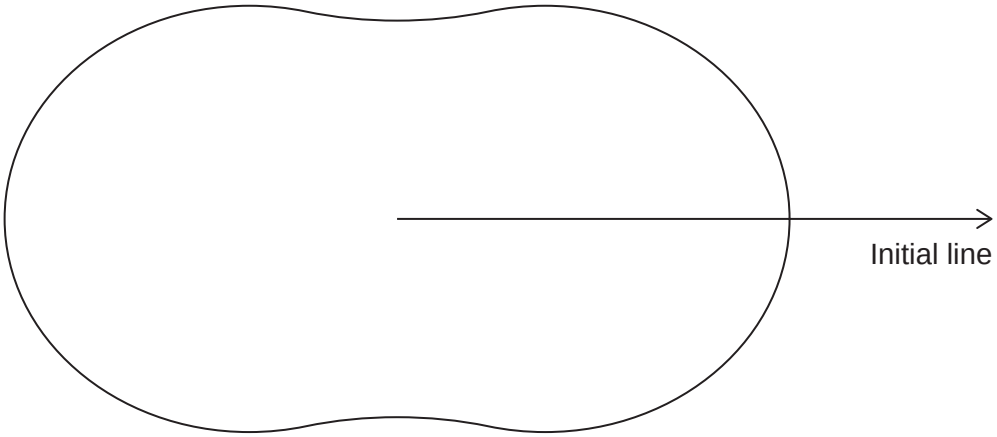

There is a solid concrete island inside the paddling pool.

The boundary of the island is modelled by the polar curve

$$r = 2 + \cos\theta$$

where r is measured in metres.

14 (a) Sketch the boundary of the island on **Figure 2**

[2 marks]

Do not write outside the box

14 (b) The paddling pool has a constant depth of 0.3 metres.

Find the volume of water in the paddling pool.

Give your answer to **four** significant figures.

Fully justify your answer.

[6 marks]

Do not write outside the box

15 Prove that

$$\int_{5}^{\infty} \frac{1}{(x+1)(2x+3)}\,\mathrm{d}x = \ln\left(\frac{13}{12}\right)$$

Show the limiting process clearly.

[6 marks]

Do not write outside the box

Turn over for the next question

Do not write outside the box

16 The diagram shows a design for a table top.

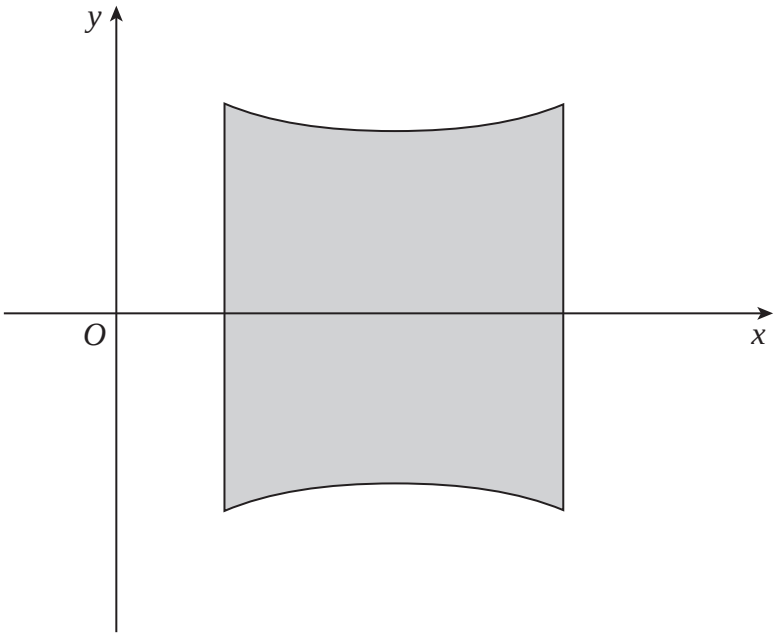

The table top is modelled as being bounded by the lines $x = 0.5$ and $x = 1.5$, and the curves defined by $y^2 = \dfrac{0.27}{2x - x^2}$, where x and y are measured in metres.

Find the area of the table top according to this model.

Give your answer in the form $\dfrac{\pi\sqrt{p}}{q}$ square metres, where p and q are integers.

Fully justify your answer.

[5 marks]

Do not write outside the box

Turn over for the next question

Do not write outside the box

17 A sample of biological material is placed in a freezer, and the freezer is then turned on.

The initial temperature of the sample is 38 °C

The temperature u °C of the freezer, at time t minutes after it is turned on, is modelled by

$$u = 18 - 2t$$

The temperature y °C of the sample is modelled as decreasing at a rate which is proportional to the difference between the temperature of the sample and the temperature of the freezer.

Initially, the temperature of the sample is decreasing at a rate of 0.8 °C per minute.

17(a) Show that y satisfies the differential equation

$$\frac{\mathrm{d}y}{\mathrm{d}t} + 0.04y = 0.72 - 0.08t$$

[3 marks]

17 (b) Find an expression for y in terms of t

[7 marks]

Do not write outside the box

Question 17 continues on the next page

Do not write outside the box

17 (c) Find the time at which the freezer is 28 °C colder than the sample.

Give your answer in minutes and seconds.

[4 marks]

17 (d) State **one** limitation of the model used.

[1 mark]

END OF QUESTIONS

Do not write outside the box

There are no questions printed on this page

DO NOT WRITE ON THIS PAGE
ANSWER IN THE SPACES PROVIDED

Do not write outside the box

Question number	Additional page, if required. Write the question numbers in the left-hand margin.

Do not write outside the box

Question number	Additional page, if required. Write the question numbers in the left-hand margin.

Do not write outside the box

Question number	Additional page, if required. Write the question numbers in the left-hand margin.

Copyright information

For confidentiality purposes, all acknowledgements of third-party copyright material are published in a separate booklet. This booklet is published after each live examination series and is available for free download from www.aqa.org.uk

Permission to reproduce all copyright material has been applied for. In some cases, efforts to contact copyright-holders may have been unsuccessful and AQA will be happy to rectify any omissions of acknowledgements. If you have any queries please contact the Copyright Team.

Copyright © 2025 AQA and its licensors. All rights reserved.